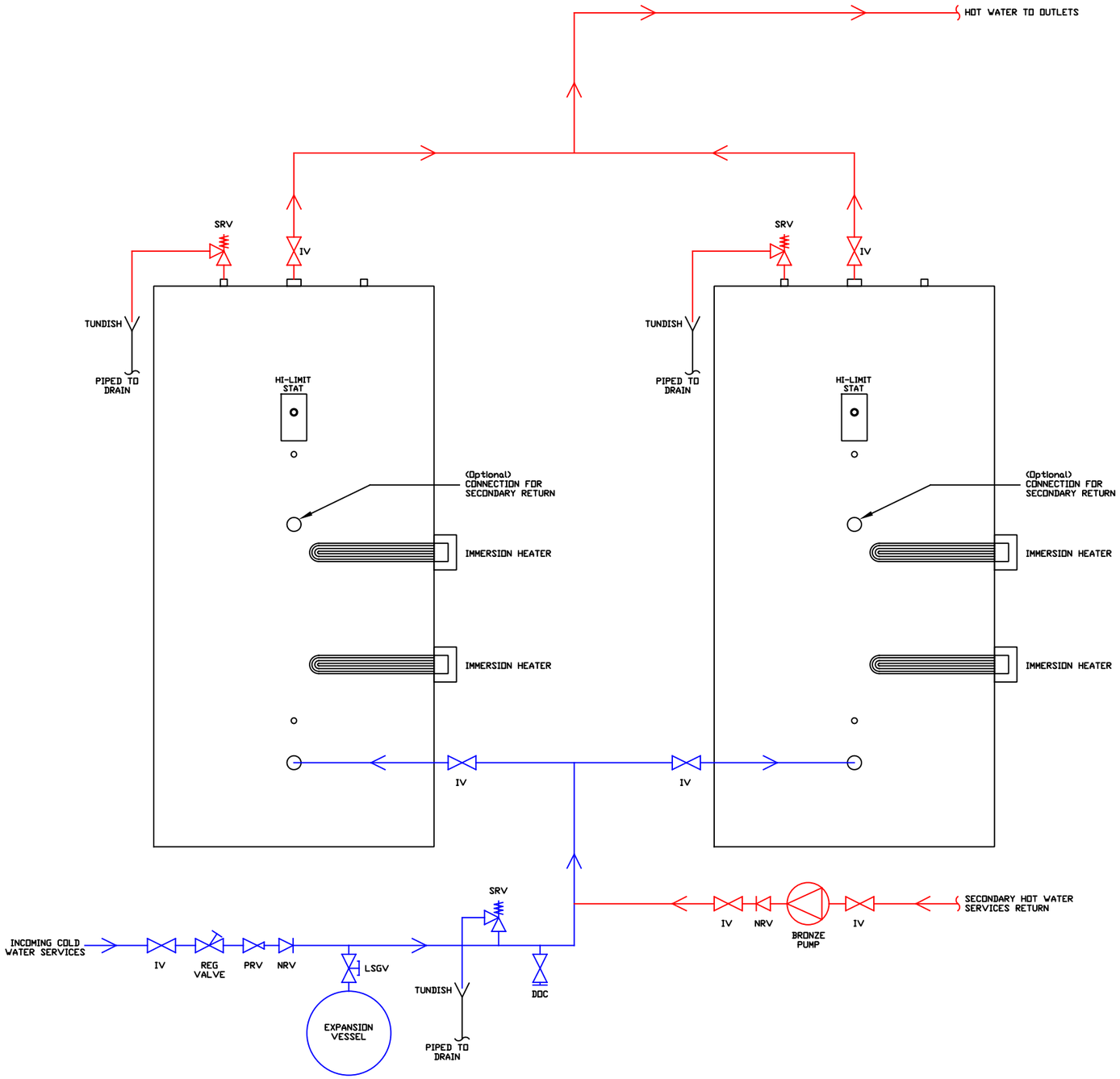

DO NOT SCALE DRAWING | REVISION 1

CHWS
www.chwsltd.co.uk

Commercial Hot Water Solutions Ltd.
Weston Industrial Estate,
65 Gazelle Rd, Weston-super-Mare,
BS24 9ES

DISCLAIMER.
This drawing is for reference only.
This is a typical system schematic which is aimed to assist in developing a full system design.
This drawing should be used as a guide only.

CHWS hold no design responsibility for any project installations.
Consultant and 3rd party equipment manufacturers drawings and installation guides should be followed at all times.

THIS DRAWING AND IT'S CONTENTS ARE PROPERTY OF CHWS LTD. DO NOT DISCLOSE, REPRODUCE, OR PUBLISH WITHOUT WRITTEN CHWS APPROVAL

DRAWN P REES | DATE 17/02/2025

TITLE
TYPICAL SCHEMATIC
2 X BUFFER VESSELS INSTALLED IN PARALLEL

DRAWING NUMBER A3

WEIGHT KG | SCALE NTS | SHEET 1 OF 1