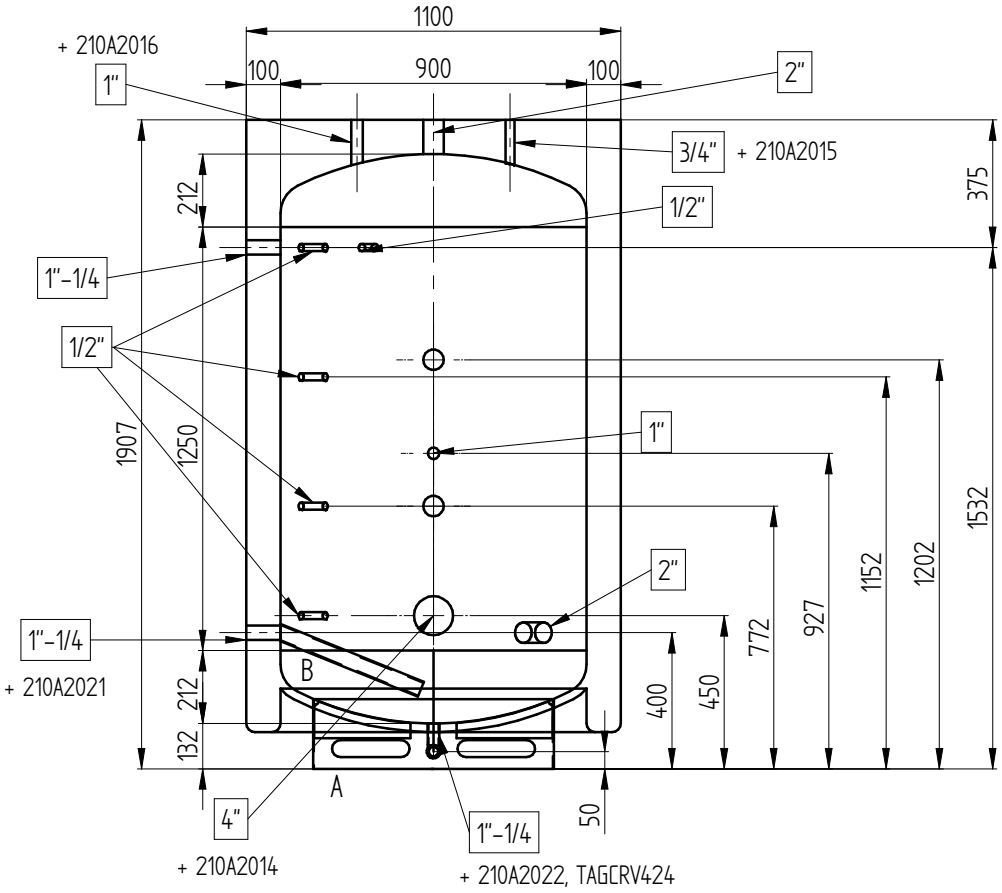

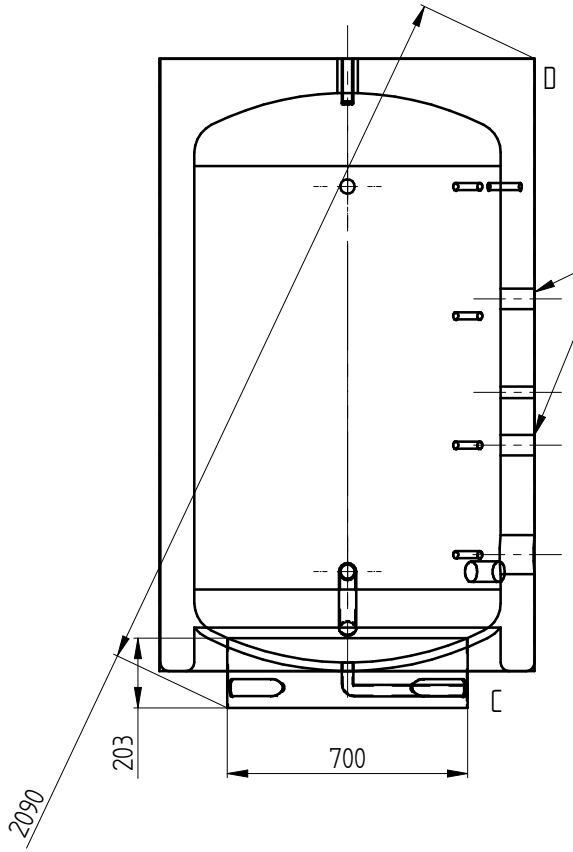

Detail A
Stand Ring Φ 700 H 203

Detail B
Internal
Destratification Pipe 1"-1/4

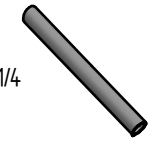

Detail C
Drain 1"-1/4

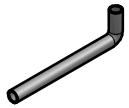

Detail D
Metal Sheet Cladding 1 mm

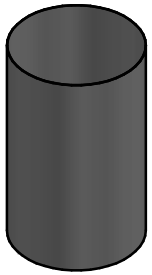

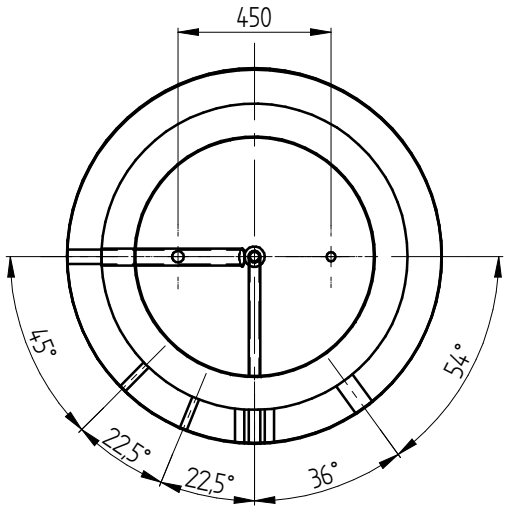

Drawn by	Date	Weight (Kg)	Material	General manufacturing tolerances not listed UNI-ISO 2768 m	Scale	UNI A4
Davidovic N.	13/05/2024		AISI 316L		1:22	

CHWS

Name
XMF BUFFER TANK 1000 LT

Drawing Code
TAC01000VIDP10P001

Rev.
7