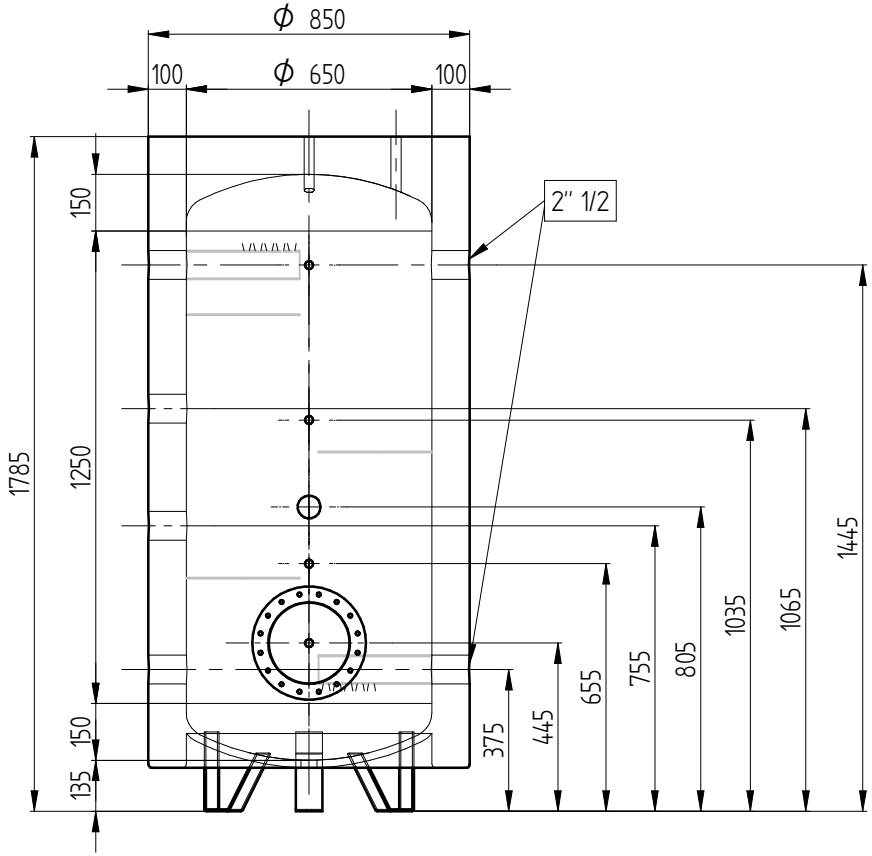

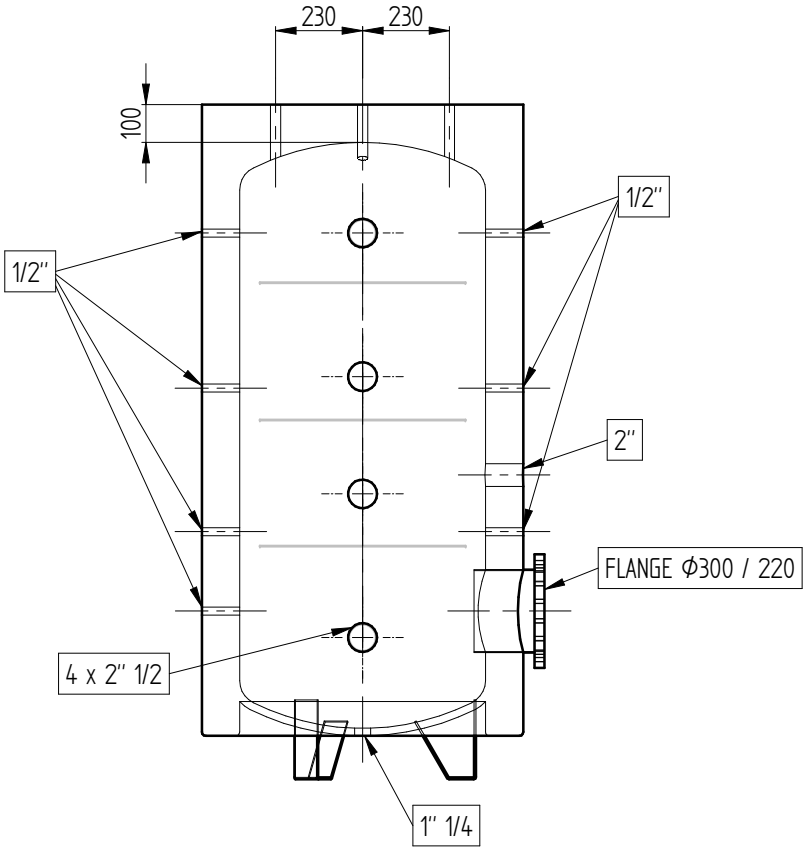

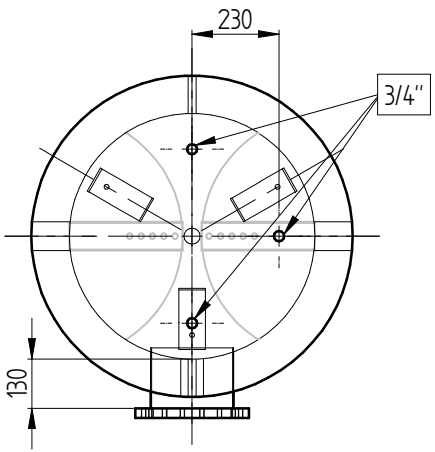

Drawn by	Date	Revision date	Material	General manufacturing tolerances not listed UNI-ISO 2768c	Scale	UNI A4
Pedrollo F.	09/07/2025		FE		1:20	

CHWS

Name
PROSTOR PS 500 LT

Drawing code

Rev.
1